ISSN 2395-1621

Prediction of Heart Disease using ANN

#1Sagar Tanwar, #2Merensosang, #3Nitesh Tirkey, #4Aolemba

1sagartanwar@gmail.com
2vulpin99@yahoo.com
3nitesh.arc@gmail.com
4alempongen71@gmail.com

M.I.T College of Engineering, Pune
Pune University, Pune

ABSTRACT

Heart disease is one of the most complicated forms of diseases among the people. It is imperative that reliable Decision Support Systems are available to the masses without compromises in the accuracy of the output. In this study, we introduce a classification approach using Multi-Layer Perceptron (MLP) with Back-Propagation learning algorithm along with biomedical parameters to diagnose heart diseases. Making the best use of experiences and knowledge of several specialists and clinical screening data of patients composed in databases to assist the diagnosis procedure is one of the basic aims of this project.

ARTICLE INFO

Article History

Received: 8th May 2016

Received in revised form : 8th May 2016

Accepted: 11th May 2016

Published online : 18th May 2016

Keywords: **Back Propagation Neural Network, Data mining, Genetic algorithm**

I. INTRODUCTION

There are several factors that can trigger the onset of heart disease among the people such as high blood pressure, high cholesterol level etc. According to W.H.O. (World Health Organization), one third of the population worldwide died from heart disease, heart disease is found to be the leading cause of death in developing countries by 2010. In this project, we attempt to make use of these data and predict the chance of a person to suffer from heart disease and also its diagnosis.

II. DATA MINING

It is a computational process of discovering related patterns in large data sets. The main aim of Data Mining is to find patterns automatically with minimal user input. Data Mining is a tool capable of handling decision making and for predicting future trends.

III. ARTIFICIAL NEURON NETWORK

Uses of Data Mining techniques in ANN help in extracting the data from the database and then train them according to the required target vector. With multi-layered neural networks we can solve non-linear separable problems such as the XOR which is not achievable using single layer (perceptron) networks.

This configuration is actually called a Perceptron. The perceptron (an invention of Rosenblatt [1962]), was one of the earliest neural network models. A perceptron models a neuron by taking a weighted sum of inputs and sending the output 1, if the sum is greater than some adjustable threshold value. The perceptron itself consists of weights, the summation processor, and an activation function, and an adjustable threshold processor (called bias).

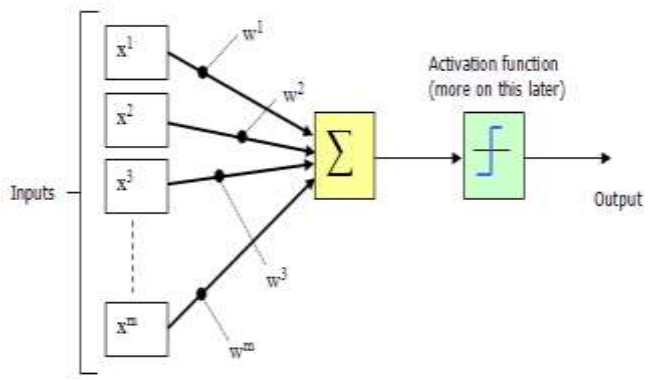

Fig: 1: Artificial Neuron configuration

IV. LEARNING IN PERCEPTRONS

The perceptron is trained to respond to each input vector with a corresponding target output of either 0 or 1. The learning rule has been proven to converge on a solution in finite time if a solution exists.

The learning rule can be summarized in the following two equations:

$$b = b + [T - A] \quad (1)$$

For all inputs i:

$$W(i) = W(i) + [T - A] * P(i) \quad (2)$$

Where **W** is the vector of weights, **P** is the input vector presented to the network, **T** is the correct result that the neuron should have shown, **A** is the actual output of the neuron, and **b** is the bias.

V. NEED FOR BIAS

A bias unit is meant to allow units in your net to learn an appropriate threshold (i.e. after reaching a certain total input, start sending positive activation), since normally a positive total input means a positive activation. For example if your bias unit has a weight of -2 with some neuron x, then neuron x will provide a positive activation if all other input adds up to be greater than -2.

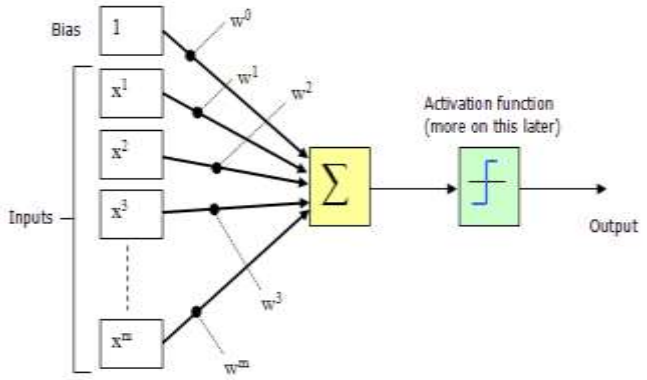

Fig. 2: Neuron configuration with bias

VI. TRAINING

Vectors for a training set are presented to the network one after another. If the network's output is correct, no change is made. Otherwise, the weights and biases are updated using the perceptron learning rule (as shown above). When each epoch (an entire pass through all of the input training vectors is called an epoch) of the training set has occurred without error, training is complete. At this time any input training vector may be presented to the network and it will respond with the correct output vector. If a vector, **P**, not in the training set is presented to the network , the network will tend to exhibit generalization by responding with an output similar to target input vectors close to the previously unseen input vector **P.**

VII. PROPOSED METHODOLOGY

Since the relationship between the input and the output is of non-linear, the use of Back Propagation algorithm in Multi Layered Perceptron gives the best accuracy. The drawback of using a BP algorithm is the problem of stuck in local minima which deny the maximum profit. Therefore, optimizer called Genetic algorithm is used. **Feed-Forward** type of ANN is used, which allows the input data to travel in only one way between the layers.

Genetic algorithm tries to copy the idea of natural selection principle by coding the possible solution alternatives of a problem as a genetic string. The genes can be bits, integers, or any other type from which a specific solution can be deduced. It is required that all solution points can be represented by at least one string. On the other hand, a specific gene string leads to exactly one solution.

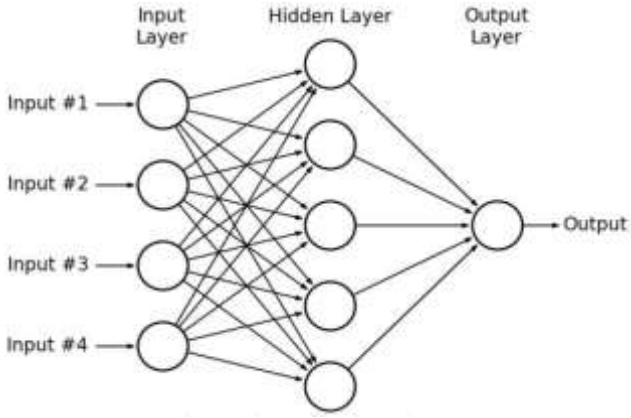

Fig. 3: Feed-Forward Neural Networks

VIII. MATHEMATICAL MODEL

Let‘s’ be system;
s = {U, P, O, F}
‘U’ be the set of users;
U = {u1, u2… n }
‘P’ be the parameters, like age, blood group, cholesterol etc. ;
P = {p1, p2 ….pn }
‘O’ be the set of outputs;
O = {o1, o2…on }
‘F’ be the set of functions;
ImportData() , TrainData() , Prediction() , Accuracy();

IX. DATA FLOW

Fig. 4: Level 0

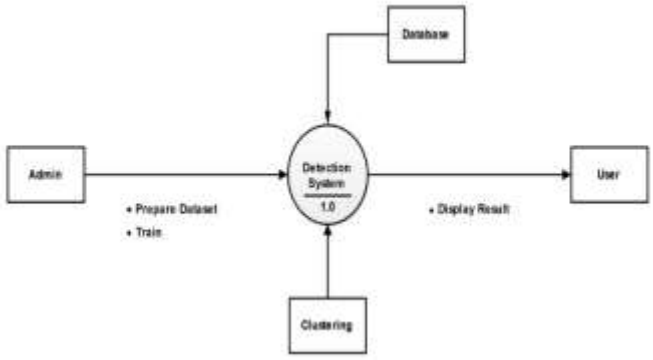

Fig. 5: Level 1

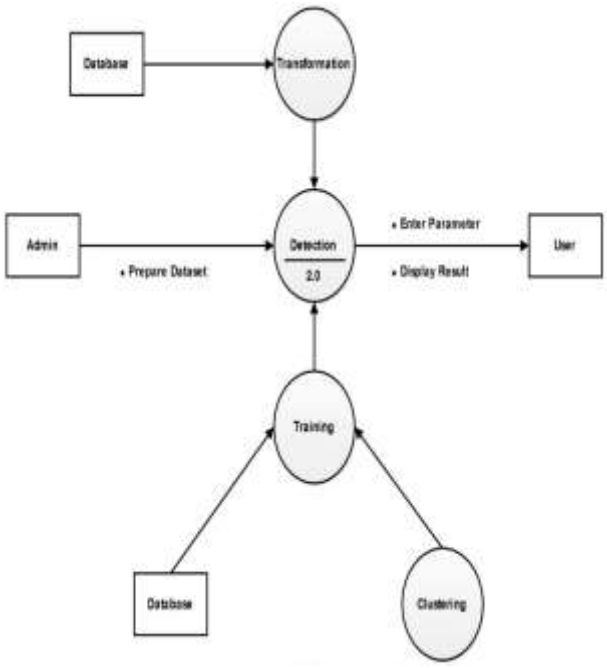

Fig. 6: Level 2

X. CONCLUSION

It is hereby observed that the accuracy of the prediction is much higher using the Multi Layered Perceptron with back propagation learning algorithm than the existing ones. The implementation of Genetic algorithm helps in getting the maximum profit by overcoming the limitation of back propagation algorithm (stuck in local minima) to global minimum. A system that accurately predicts the chance of heart disease will help in preventing major heart problems for the masses through timely medication and check-ups. The limitation of stuck in local minima is overcome by using an optimizer called Genetic algorithm. Application of this prototype can be enhanced in future by designing it on different platforms and also developing mobile applications etc.

REFRENCES

[1] T.John Peter, K. Somasundaram," An empirical study on prediction of heart disease using classification data mining techniques ",International journal of information technology and knowledge management IEEE-International Conference On Advances In Engineering, Science And Management (ICAESM-2012) March 30, 31, 2012.

[2] Ms.Ishtake S.H, Prof. Sanap S.A, "Intelligent Heart Disease Prediction System Using Data Mining Techniques". International J. of Healthcare & Biomedical Research, Volume: 1, Issue: 3, April 2013.

[3] Latha Parthiban and R.Subramanian, "Intelligent Heart Disease Prediction System using CANFIS and Genetic Algorithm ", International Journal of Biological, Biomedical and Medical Sciences, Vol. 3, No. 3, 2008.

[4]Sellappan Palaniappan and Rafiah Awang, "Intelligent Heart Disease Prediction System Using Data Mining Techniques", IJCSNS International Journal of Computer Science and Network Security, Vol.8 No.8, August 2008.

[5] Anchana Khemphila, Veera Boonjing, "Heart disease Classification using Neural Network and Feature Selection", 2011 21st International Conference on Systems Engineering.

